SEIKO OPTICAL
AVENIR
CCTV LENS

Email:sales@seiko-optic.com

Low Magnification NIR STANDARD Telecentric Lens for 2/3"

Model	Spectrum (nm)	Light Type	Sensor Type	Magni-fication	Mag	W.D.	F.NO	Numerical Aperture	Telece-ntricity	TV Distortion	Depth Of Field(mm)	Object Resolution	TTL (mm)	Mount	2/3" FOV (D×H×V)	1/1.8" FOV (D×H×V)	1/2" FOV (D×H×V)	Dimensions (mm)	Weight (g)
SMT23IR02W65C-L	400-1250 Low	Coaxial	2/3"	0.2X	0.2	65mm	6.5	0.015	<0.1°	<0.1%	7.31	23.25um	140.81	C	55×44×33	44.5×36×26.5	40×32×24	φ68×123.28	306
SMT23IR02W65C-I	400-1250 High	Non-Coaxial	2/3"	0.2X	0.2	65mm	6.5	0.015	<0.1°	<0.1%	7.31	23.25um	137.64	C	55×44×33	44.5×36×26.5	40×32×24	φ68×120.11	289

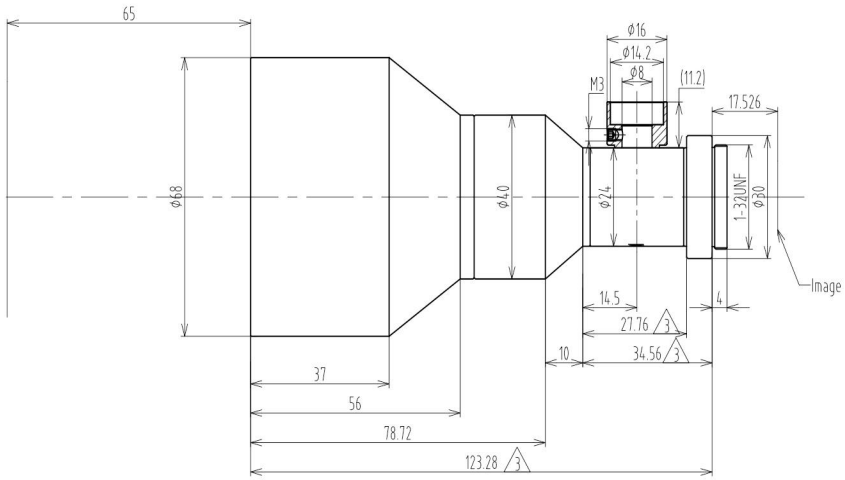

SMT23IR02W65C-L

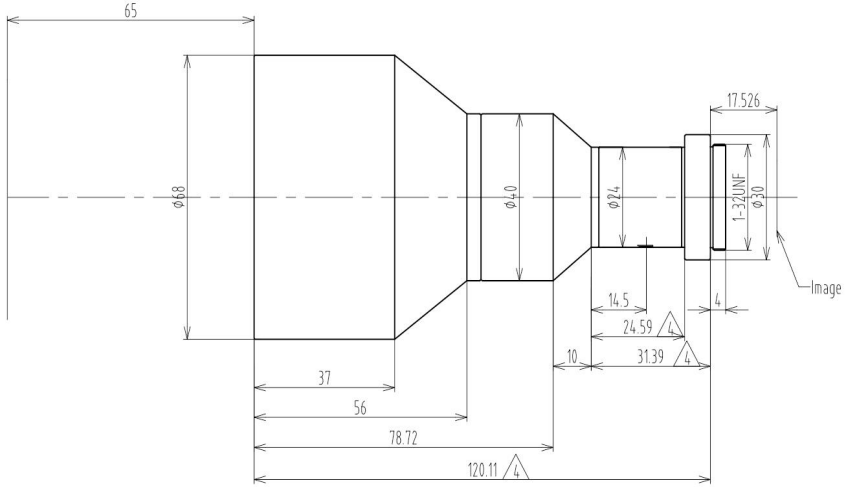

SMT23IR02W65C-I

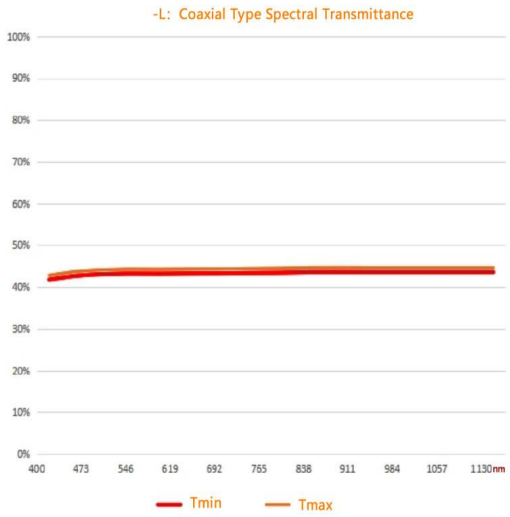

Unit: mm
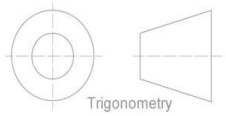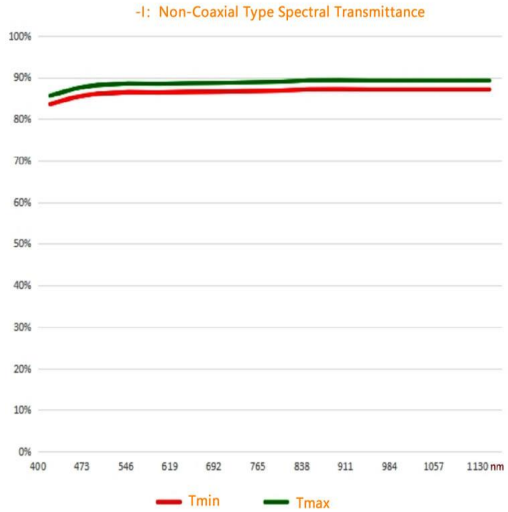
TOLERANCE :
LINEARITY TOLERANCES: ±0.05
ANGULAR TOLERANCES ARE: ±30'
DRAFT ANGLES AREA: ±0.5°/SIDE