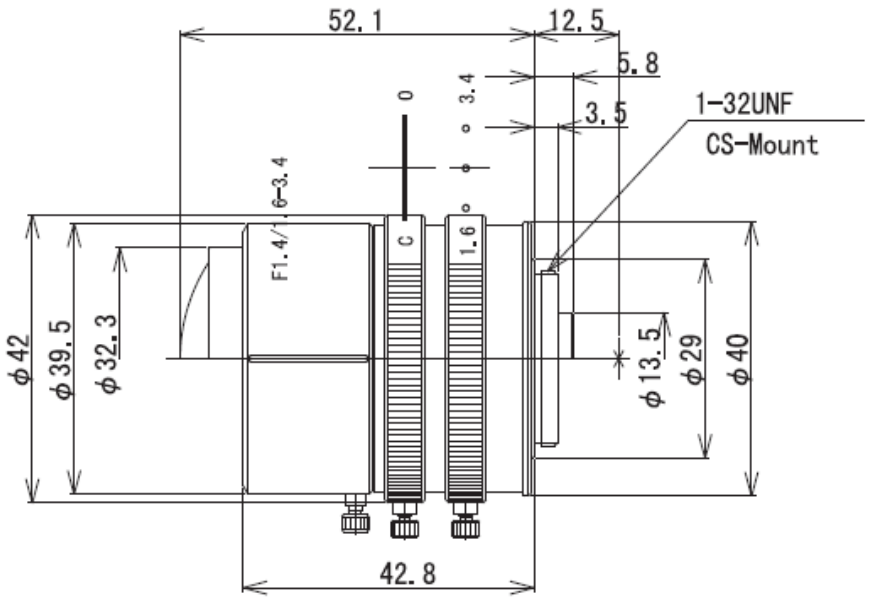

1/3″ 1.4/1.6～3.4mm CS

FOCAL LENGTH		f=1.6～3.4mm
MAX. DIAMETER (RATIO)		F=1:1.4～16～CLOSE
PICTURE SIZE		3.6x4.8mm 1/3″
ANGLE OF VIEW	VER.	114.1° ～55.8°
	HOR.	180° ～84.3°
	DIA.	180° ～106.1°
MINIMUM FOCUS DISTANCE		0.2m
FLANGE BACK		12.5mm in air
BACK FOCUS		7.07mm～11.55mm in air
FILTER SCREW SIZE		——
FRONT/REAR EFFECTIVE DIA.		φ27.8mm φ8.6mm
MOUNT		CS-MOUNT
EXIT PUPIL		85.5mm
TEMPERATURE RANGE		-10～45 C°
STORAGE TEMPERATURE RANGE		-40～60 C°
RESOLUTION		100 lp/mm (Center) 40 lp/mm (Corner)
STOPPER STRENGTH		10kgf/cm
ENDURANCE TESTS		F:5,000Times Z:5,000Times I:5,000Times
WEIGHT		98g

		1/1		
		1/3″ 1.4/1.6-3.4mm		
98.11.7		LMVZ164		