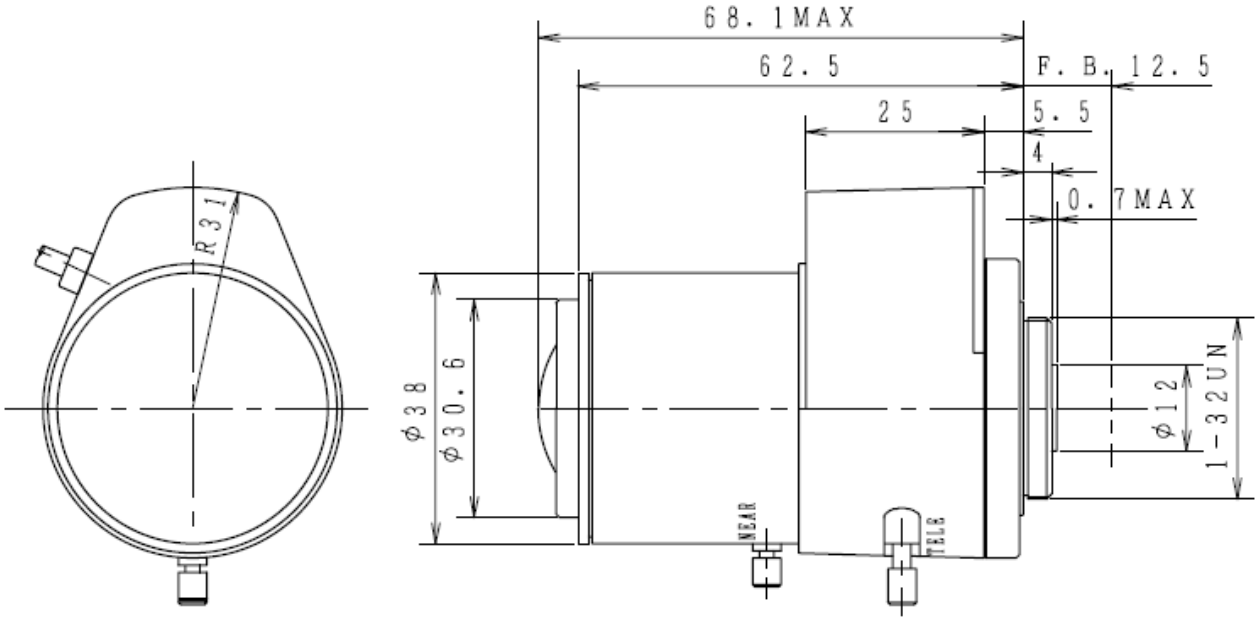

SPECIFICATION AUTO IRIS

1. USE		FOR 1/3″ B/W COLOR CAMERA			
2. FOCAL LENGTH		2.7-12mm			
3. ZOOM RATIO		4.5x			
4. MAX. DIA. RATIO		F1.4			
5. IRIS RANGE		F1.4-360			
6. IMAGE SIZE		φ 6			
7. BACK FOCAL LENGTH		W 8.52mm	T	20.77 mm	in air
8. FLANGE FOCAL LENGTH		12.5mm			in air
9. FOCUS RANGE		0.25m			
10. FIELD ANGLE	DIA.	W 118.0°	T	27.0°	
	HOR. HOR.	96.0°		22.6°	
	VER.	72.6°		17.1°	
11. FIELD OF VIEW AT M.O.D.	DIA.	W --- mm	T	--- mm	
	HOR.	58.0 mm		11.2 mm	
	VER.	38.5 mm		8.4 mm	
12. CLEAR APERTURE	FRONT	φ 30.6			
13. CLEAR APERTURE	REAR	φ 12.0			
14. EXIT PUPIL POSITION		---			
15. MOUNT		CS-MOUNT			
16. FILTER SCREW SIZE		---			
17. DISTORTION (TV)		W --- %	T	--- %	
18. WEIGHT		80g			

DC (DIRECT CONTROL)

DRIVE COIL	RESISTOR	200Ω	(20° C)
	COLOR	RED (+)	BLACK(−)
BRAKE COIL	RESISTOR	730 Ω	(20° C)
	COLOR	YELLOW(+)	ORANGE(−)
DRIVE VOLT.	OPEN	LESS THAN +4.0V	
	CLOSE	OVER THAN 0.5V	

1/3″ F1.4 / 2.7-12mm

LMVZ272A

WWW.FALENS.COM.CN WWW.FALENS.CN