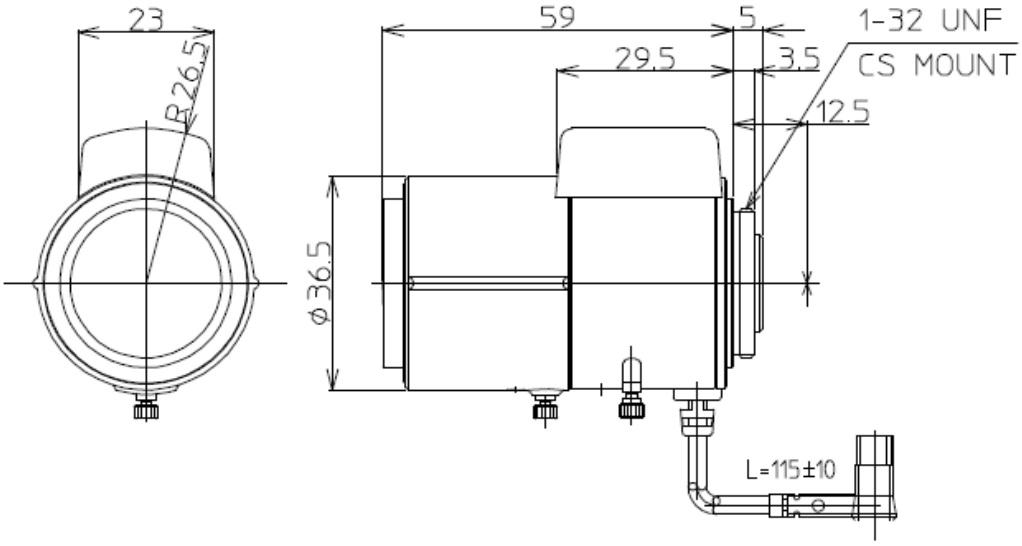

[LMVZ3510M SPECIFICATION (P-IRIS)]

1. USE		FOR 1/2" B/W COLOR CAMERA
2. FOCAL LENGTH		3.5-10mm
3. ZOOM RATIO		2.86x
4. MAX. DIA. RATIO		F1.6
5. IRIS RANGE		F1.6 – F.31.4
6. IMAGE SIZE		φ 8
7. BACK FOCAL LENGTH		W 7.97 T 17.45 in air
8. FLANGE FOCAL LENGTH		12.5mm
9. FOCUS RANGE		0.2m
10. FIELD ANGLE	DIA.	W 143.3° T 46.9°
	HOR.	108.3° 37.5°
	VER.	78.8° 28.1°
11. FIELD OF VIEW AT M.O.D.		W 1313mm T 183mm
	HOR.	585mm 143mm
	VER.	346mm 106mm
12. LENS CONSTRUCTION		10 GROUPS 10 ELEMENTS
13. CLEAR APERTURE	FRONT	φ 24.8
	REAR	φ 10.2
14. EXIT PUPIL POSITION		----
15. MOUNT		CS – MOUNT
16. FILTER SCREW SIZE		----
17. DISTORTION		W -16.1% T -1.9%
18. WEIGHT		**g