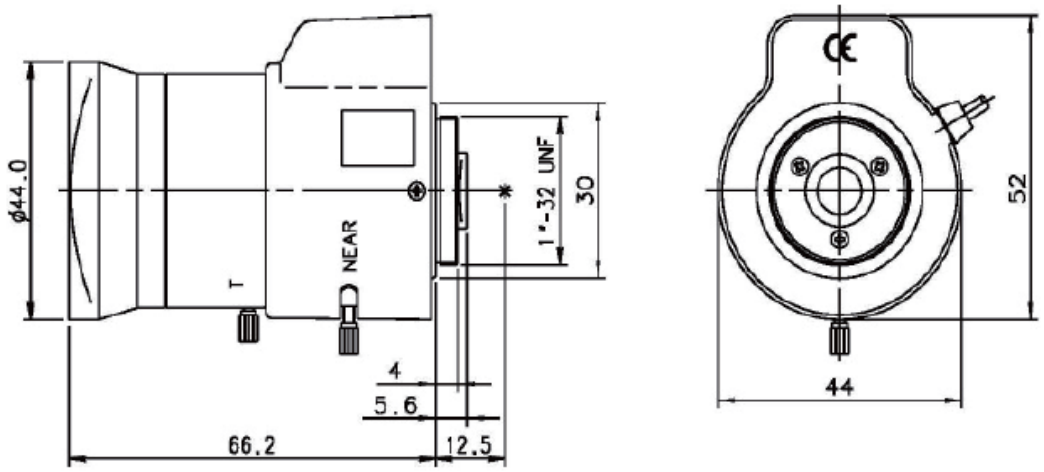

Unit : mm

SPECIFICATION AUTO IRIS

1. USE		FOR 1/3" B/W COLOR DAY & NIGHT CAMERA		
2. FOCAL LENGTH		5.0-50mm		
3. ZOOM RATIO		10.0x		
4. MAX. DIA. RATIO		F1.4		
5. IRIS RANGE		F1.4-360		
6. IMAGE SIZE		ϕ6		
7. BACK FOCAL LENGTH		W 7.6mm	T 11.5mm	in air
8. FLANGE FOCAL LENGTH		12.5 mm		in air
9. FOCUS RANGE		0.5m		
10. FIELD ANGLE	DIA.	W 65.7°	T 7.2°	
	HOR. HOR.	52.7°	5.7°	
	VER.	39.6°	4.3°	
11. FIELD OF VIEW AT M.O.D.				
	HOR.	W 495mm	T 50mm	
	VER.	360mm	38mm	
12. CLEAR APERTURE	FRONT	ϕ37.7mm		
13. CLEAR APERTURE	REAR	ϕ10.0mm		
14. EXIT PUPIL POSITION		W ---	T ---	
15. MOUNT		CS-MOUNT		
16. FILTER SCREW SIZE		——		
17. DISTORTION (TV)		W ---	T ---	
18. WEIGHT		157g		

DC (DIRECT CONTROL)

DRIVE COIL	RESISTOR	190Ω (25° C)	
	COLOR	YELLOW(+)	ORANGE(−)
BRAKE COIL	RESISTOR	700 Ω (25° C)	
	COLOR	RED (+)	BROWN (−)
DRIVE VOLT.	OPEN	LESS THAN 4.5V	
	CLOSE	OVER THAN 0.5V	

1/3" F1.4 / 5.0-50mm

LMVZ550A-IR