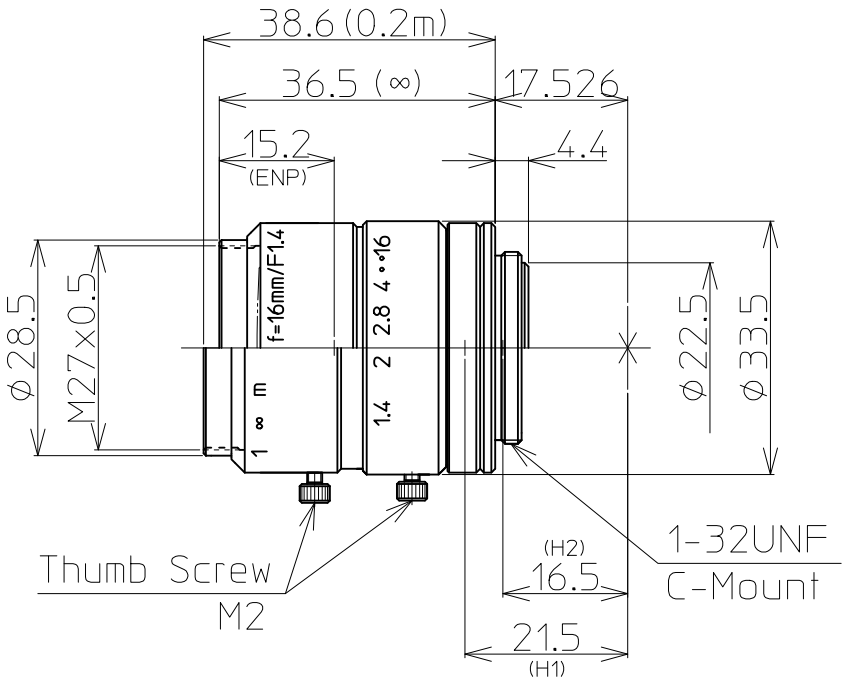

2/3" 1.4/16mm C		2/3"	1/1.8"	1/2"
FOCAL LENGTH		f=16mm		
MAX. DIAMETER (RATIO)		F=1:1.4~16		
PICTURE SIZE		6.6x8.8mm		
ANGLE	VER. ANGLE	22.7°	18.6°	16.4°
	HOR. ANGLE	30.0°	24.7°	21.8°
	DIA. ANGLE	37.0°	30.9°	27.4°
DISTORTION (TV)		-0.05%		
SHOOTING RANGE AT	VER.	84.4mm	68.7mm	61.0mm
MINIMUM FOCUS	HOR.	112.8mm	91.8mm	81.5mm
DISTANCE	DIA.	140.4mm	114.9mm	102.1mm
MINIMUM FOCUS DISTANCE		0.2m		
FLANGE BACK		17.526mm in air		
BACK FOCUS		13.1mm in air		
FILTER SCREW SIZE		M27x0.5		
FRONT/REAR EFFECTIVE DIA.		FRONT φ20.2mm	REAR φ15.5mm	
MOUNT		C-MOUNT		
EXIT PUPIL		338.4mm		
TEMPERATURE RANGE		-10~+50°C		
STORAGE TEMPERATURE RANGE		-20~+60°C		
RESOLUTION CENTER/CORNER		CENTER 100lp/mm	CORNER 80lp/mm	
WEIGHT		85 g		

NOTE:Specifications and availability are subject to change without notice

注）本仕様については、予告なしに変更する場合があります。

		尺度 1/1	工場番号 HR939KW
		機種名	2/3" F1.4 f=16mm
2013.11.21	更新	機種番	LM16JC1MS 外観図
2013.4.15	作成年月日		