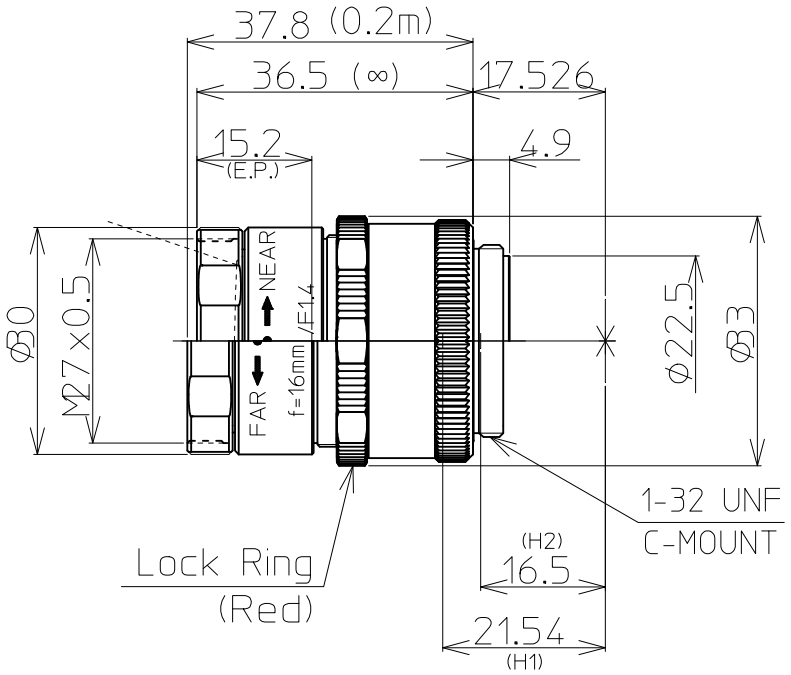

2/3" 1.4/16mm C		2/3"	1/1.8"	1/2"
FOCAL LENGTH		f=16mm		
MAX. DIAMETER (RATIO)		F=1:1.4,4,8,16		
ELEMENT		7群 8枚		
PICTURE SIZE		6.6×8.8mm	5.4×7.2	4.8×6.4
ANGLE	VER. ANGLE	22.7°	18.6°	16.4°
	HOR. ANGLE	30.0°	24.7°	21.8°
	DIA. ANGLE	37.0°	30.9°	27.0°
DISTORTION (TV)		-0.05%		
SHOOTING RANGE AT	VER.	84.4 mm	68.7	61.2
MINIMUM FOCUS	HOR.	112.8 mm	91.8	81.8
DISTANCE	DIA.	141.2 mm	114.9	102.5
MINIMUM FOCUS DISTANCE		0.2m		
FLANGE BACK		17.526 mm in air		
BACK FOCUS		13.1mm in air (Mechanical 13.1mm in air)		
FILTER SCREW SIZE		M27×0.5		
FRONT/REAR EFFECTIVE DIA.		FRONT φ20.2mm REAR φ15.5mm		
MOUNT		C-MOUNT		
EXIT PUPIL		338.4mm		
TEMPERATURE RANGE		-10~+50°C		
STORAGE TEMPERATURE RANGE		-20~+60°C		
RESOLUTION CENTER/CORNER		CENTER 100lp/mm CORNER 80lp/mm		
WEIGHT		75g		

NOTE:Specifications and availability are subject to change without notice

注）本仕様については、予告なしに変更する場合があります。

		尺度 1/1	工場番号 HR939WP
		機種名 2/3" F1.4 f=16mm	
2019.06.05	更新	機種番 LM16JCM-WP 外観図	
2018.05.31	作成年月日		