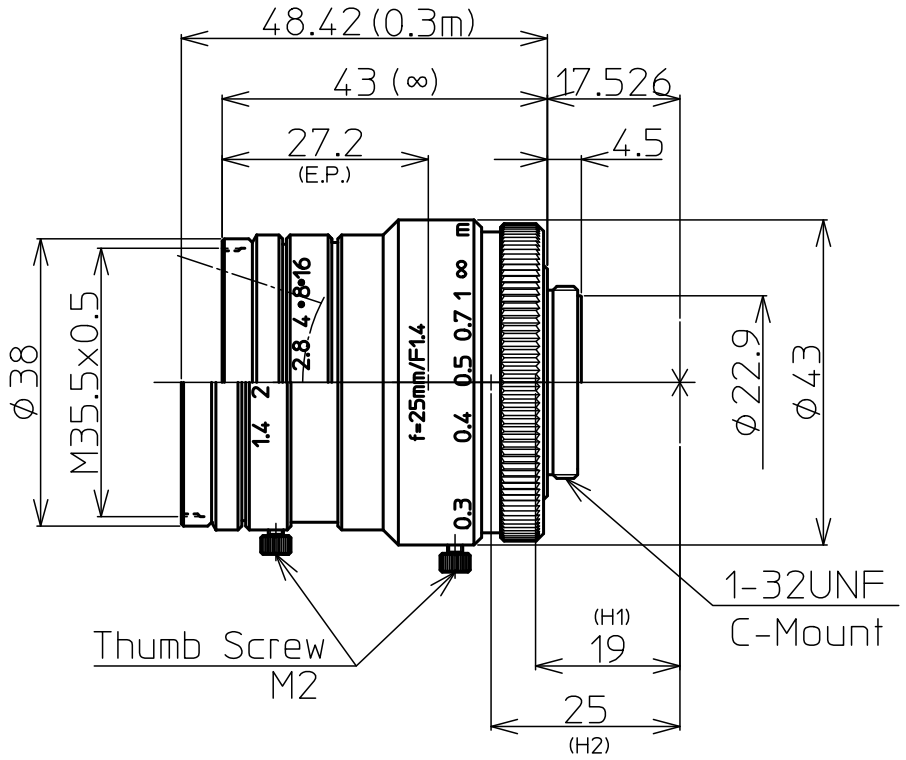

1" 1.4/25mm C		1"	2/3"	1/1.8"
FOCAL LENGTH		f=25mm		
MAX. DIAMETER (RATIO)		F=1:1.4~16		
PICTURE SIZE		9.6x12.8mm	6.6x8.8mm	5.4x7.2mm
ANGLE	VER. ANGLE	22.0°	15.1°	12.4°
	HOR. ANGLE	29.3°	20.2°	16.5°
	DIA. ANGLE	36.6°	25.2°	20.6°
DISTORTION (TV)		-1.0%		
SHOOTIG RANGE AT	VER.	119.2mm	81.4mm	66.5mm
MINIMUM FOCUS	HOR.	160.7mm	109.1mm	88.9mm
DISTANCE	DIA.	204.3mm	137.4mm	111.7mm
MINIMUM FOCUS DISTANCE		0.3m		
FLANGE BACK		17.526mm in air		
BACK FOCUS		16.5mm in air		
FILTER SCREW SIZE		M35.5x0.5		
FRONT/REAR EFFECTIVE DIA.		FRONT φ21.0mm	REAR φ19.4mm	
MOUNT		C-MOUNT		
EXIT PUPIL		-57.9mm		
TEMPERATURE RANGE		-10~+50°C		
STORAGE TEMPERATURE RANGE		-20~+60°C		
RESOLUTION CENTER/CORNER		CENTER 100lp/mm	CORNER 80lp/mm	
WEIGHT		135 g		

NOTE:Specifications and availability are subject to change without notice

注）本仕様については、予告なしに変更する場合があります。

		尺度 1/1	工場番号 HR978NCN-3H
		機種名 1" F1.4 f=25mm	
2014.12.25	更新	機種番 LM25HC 外観図	
2013.4.15	作成年月日		